INJECTION MODULE 091/0145 CONVERSION 091-71004

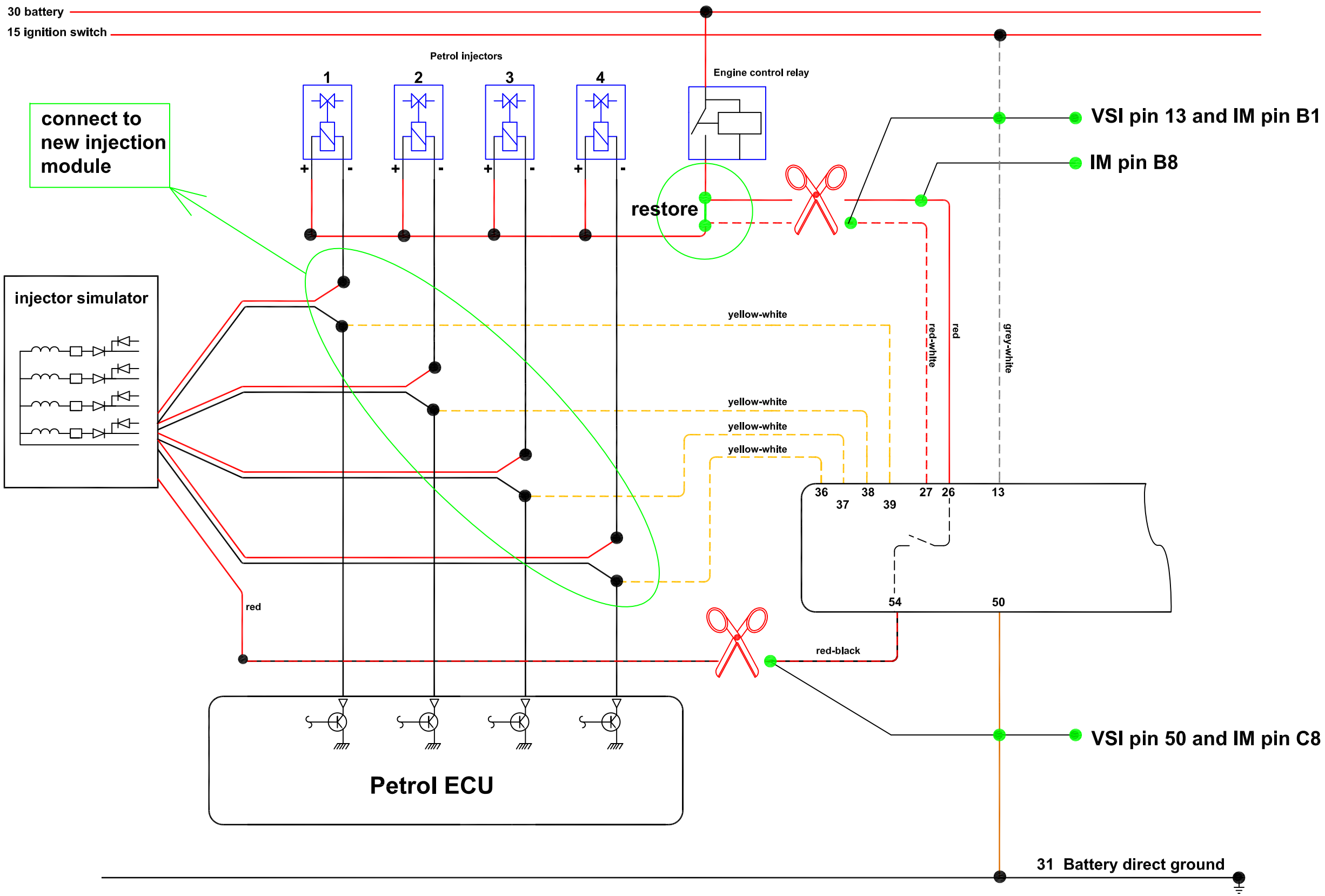

CONNECTOR NEW IM WIRING

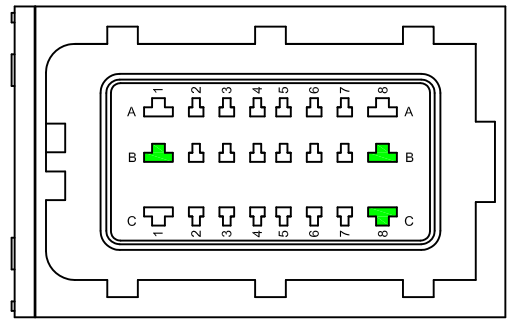

injection module 4 cylinder			
pin	connected to	wire color	print on wire
A1			
A2	vsi ecu	white-yellow	39 ecu side 1
A3	vsi ecu	green-yellow	38 ecu side 2
A4	vsi ecu	pink-yellow	37 ecu side 3
A5	vsi ecu	blue-yellow	36 ecu side 4
A6			
A7			
A8			
B1	vsi ecu	grey-white	13 ingnition plus
B2	petrol ecu	white-yellow	39 ecu side 1
B3	petrol ecu	green-yellow	38 ecu side 2
B4	petrol ecu	pink-yellow	37 ecu side 3
B5	petrol ecu	blue-yellow	36 ecu side 4
B6			
B7			
B8	vsi ecu	red-white	26 inj. mod. command
C1			
C2	petrol injector	white	min inj side 1
C3	petrol injector	green	min inj side 2
C4	petrol injector	pink	min inj side 3
C5	petrol injector	blue	min inj side 4
C6			
C7			
C8	vsi ecm	brown	54 inj. mod. ground